SHEET XV-14a

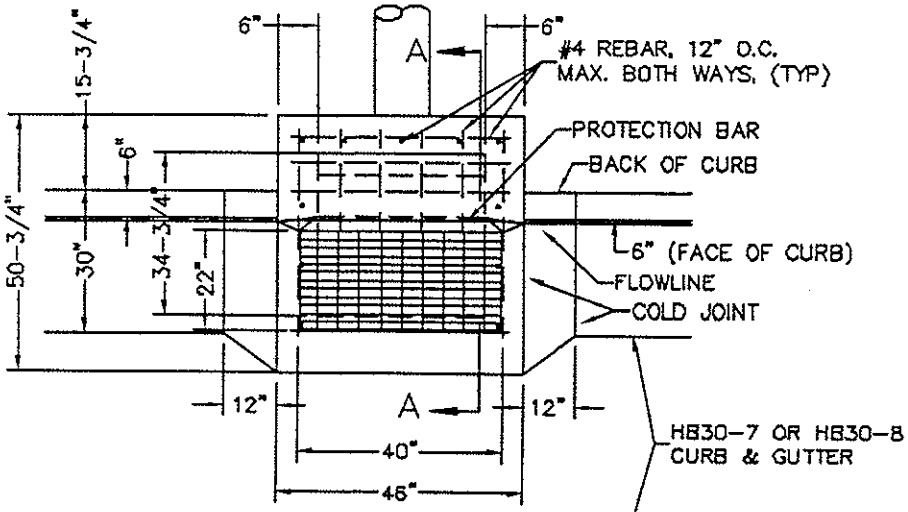

PLAN VIEW
N.T.S.

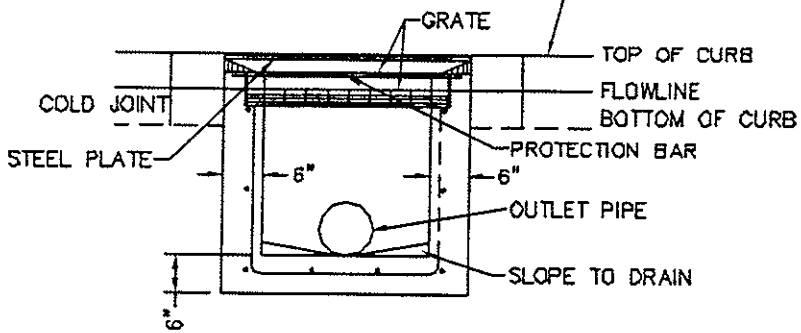

FRONT ELEVATION
N.T.S.

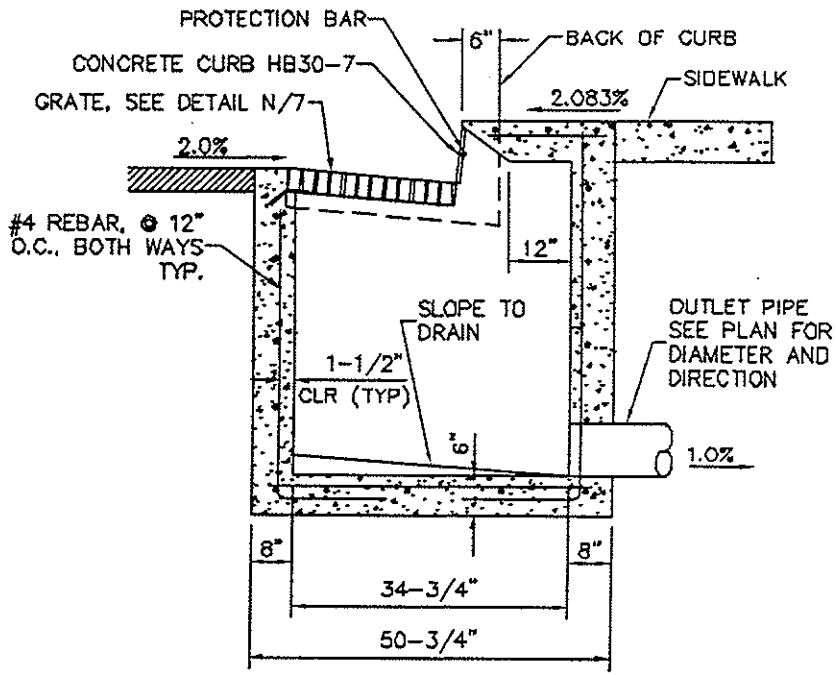

SECTION A-A
N.T.S.

NOTE:
1. SEE PLANS FOR PIPE LOCATION AND DIAMETER.
2. SEE PLANS FOR FLOWLINE ELEVATIONS.

CURB INLET CATCH BASIN

FILE: KANAB-STD.DETAILS.dwg

SHEET XV-14b

NOTE: ALL EXPOSED METAL PARTS SHALL BE GALVANIZED AND ALL GALVANIZING DAMAGED BY FABRICATION OR INSTALLATION SHALL RECEIVE TWO COATS OF ALUMINUM PAINT (GALVONOX OR EQUAL.)

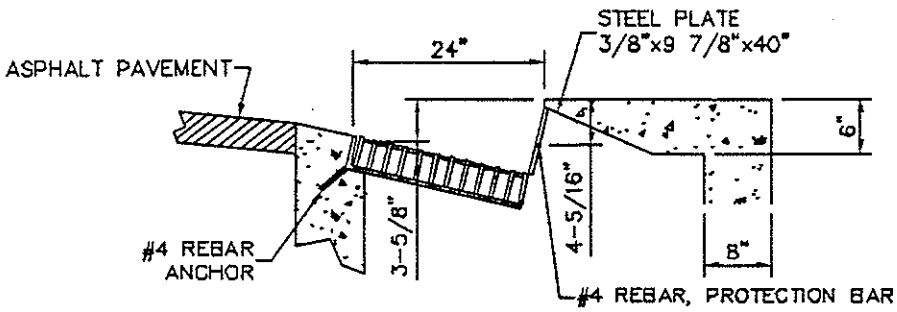

FRAME AND GRATE INSTALLATION
N.T.S.

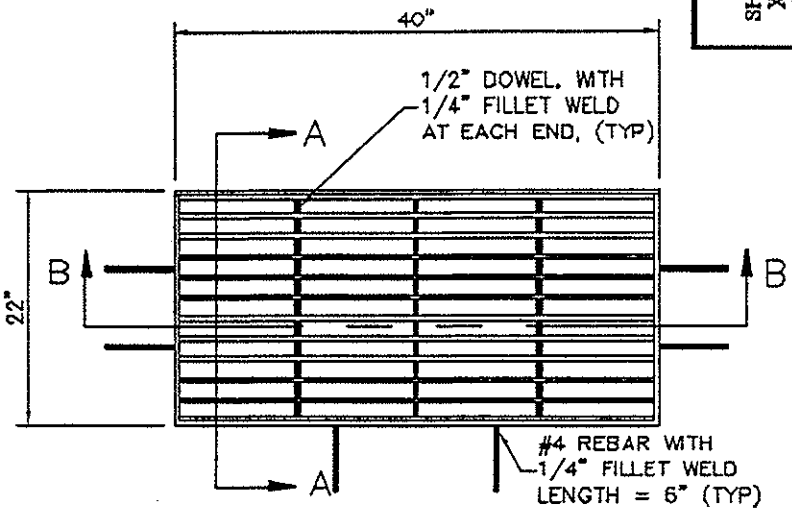

GRATE PLAN VIEW
N.T.S.

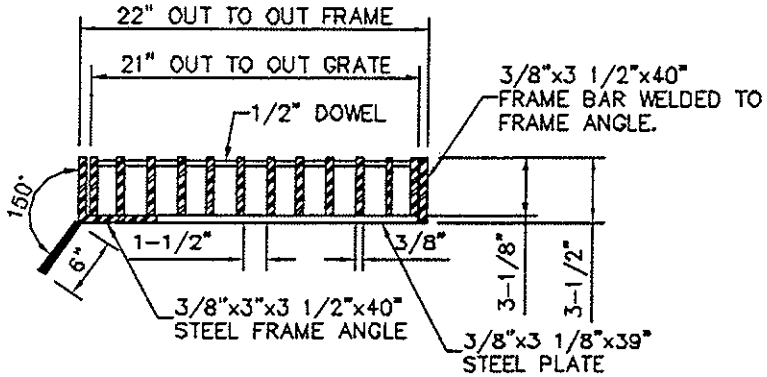

SECTION A-A
N.T.S.

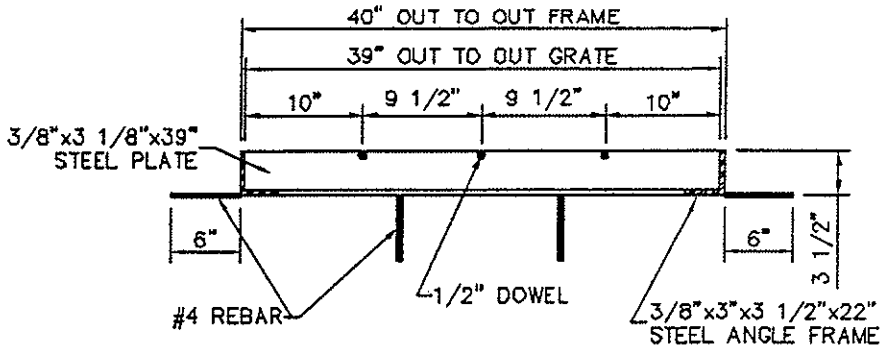

SECTION B-B
N.T.S.

CATCH BASIN GRATE & FRAME

FILE: KANAB-STD.DETAILS.dwg