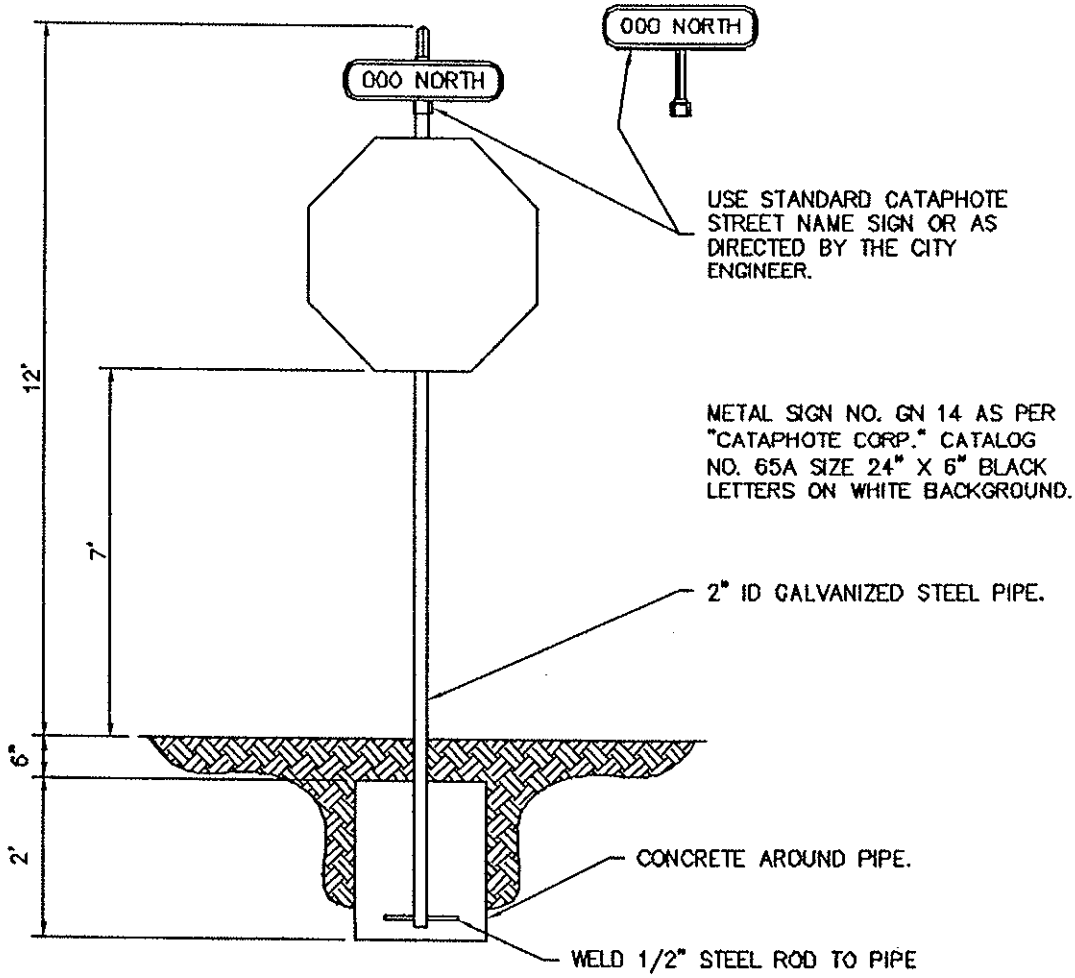

NOTE:
INSTALLATION AS PER THE MANUAL ON UNIFORM TRAFFIC CONTROL DEVICES (CURRENT EDITION)

STREET SIGN

N.T.S.

SHEET XV-06

FILE: KANAB-STD.DETAILS.dwg