KANAB CITY STREET CROSS SECTION CONFIGURATIONS – TABLE 3.1

CLASS	STREET TYPE	DESIGN VOLUME (VEHICLES PER DAY)	DWELLING UNITS	MAX GRADE (%)	DIMENSIONS (IN FEET)					
					RIGHT OF WAY	PAVEMENT WIDTH	SIDEWALKS	CURBING	CURB AND GUTTER MIN. RAD. @ INT.	DWG. NO.
RESIDENTIAL ACCESS[1] (SIDEWALK–ONE SIDE)	PRIVATE	<100	2–10	15	34'	26'	4' (ONE SIDE)	2' MODIFIED	20'	RCS–1
RESIDENTIAL ACCESS[1] (SIDEWALK–BOTH SIDES)	PRIVATE	<100	2–10	15	38'	26'	4'	2' MODIFIED	20'	RCS–1
MINOR LOCAL	PRIVATE	110–500	11–50	15	42'	30'	4'	2' MODIFIED	20'	RCS–2
MAJOR LOCAL	RESIDENTIAL LOCAL	510–1,250	1–125	15	50'	35'	5'	2.5'	25'	RCS–3
MINOR COLLECTOR	RESIDENTIAL COLLECTOR	1,260–2,000	126–200	12	60'	45'	5'	2.5'	30'	RCS–4
MAJOR COLLECTOR	–	2,010–6,000	201–600	10	65'	50'	5'	2.5'	30'	RCS–5
MINOR ARTERIAL[2]	–	6,000–20,000	600+	8	80'	63'	6'	2.5'	35'	RCS–6
MAJOR ARTERIAL[2]	–	>20,000	N/A	8	100' OR MORE	83'	6'	2.5'	40'	RCS–7

1 THE PLANNING COMMISSION SHALL DETERMINE SIDEWALK REQUIREMENTS OF A RESIDENTIAL ACCESS STREET.
2 PARKING IS NOT ALLOWED ON MINOR ARTERIAL AND LARGER STREETS.
3 THE SMALLEST STREET MAINTAINED BY THE CITY SHALL BE A 50' RIGHT OF WAY.
4 AREA OF HIGH WATER FLOW MAY REQUIRE LARGER CURB AND GUTTER CAPACITY.
5 SIDEWALK WIDTHS FOR COMMERCIAL AREAS WILL BE DETERMINED ON A CASE BY CASE BASIS, ACCORDING TO EACH INDIVIDUAL SITE AND THE SURROUNDING AREA.
6 ALL OCCUPIED BUILDINGS SHALL BE CONSTRUCTED OUTSIDE FLOODWAY LIMITS AND TWO FEET ABOVE THE 100 YEAR FLOOD STAGE.
7 WHERE AN UNDERGROUND PIPE SYSTEM IS REQUIRED, IT SHALL BE DESIGNED TO CARRY A 10–YEAR RETURN FREQUENCY. MAJOR HYDRAULIC STRUCTURES SHALL BE DESIGNED TO CARRY A 25–YEAR RETURN FREQUENCY.
8 STREETS SHALL NOT BE INVERTED TO CARRY FLOOD–WATER WITHOUT SUFFICIENT JUSTIFICATION.
9 WHEN DESIGNING, THE ENGINEER SHALL GIVE PROPER CONSIDERATION TO ADJACENT PROPERTIES. THE DRAINAGE BASIN UPSTREAM SHALL BE ASSUMED FULLY DEVELOPED IN CONFORMANCE TO THE CURRENT LAND USE MASTER PLAN. THE IMPACT OF SAID RUNOFF ON DOWNSTREAM PROPERTIES SHALL ALSO BE CONSIDERED IN DESIGN INCLUDING ACQUISITION OF EASEMENT OR AGREEMENTS WHERE NECESSARY.

ALPHA ENGINEERING
148 E. TABERNACLE, ST. GEORGE, UT 84770
Telephone: (435) 628–6500

FILE: KANAB–TYP–STREET–CROSS.dwg

S:\sdskproj\001-01\KANAB-TYP-STREET-CROSS.dwg, TABLE, 2/19/2004 12:07:17 PM,

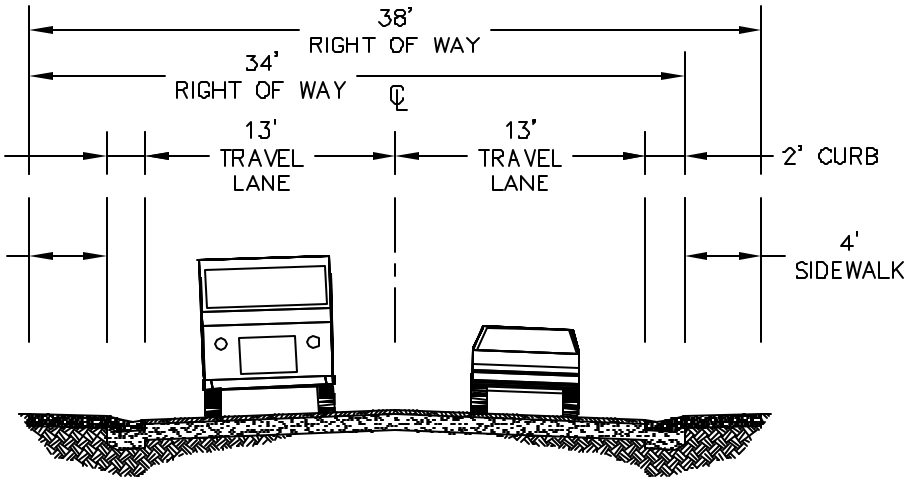

NOTE:
STREET PARKING IS NOT ALLOWED ON 34' OR 38' WIDE ROADWAYS, ALTHOUGH RESIDENTS TYPICALLY PARK ON BOTH SIDES. THE EFFECT IS THAT A SINGLE TRAVEL LANE (14' WIDE) EXISTS WHERE CARS MUST WEAVE TO PASS. TRAFFIC FLOW IS USUALLY VERY LOW (LOCAL TRAFFIC ONLY).

SF = SERVICE FLOW
S.F. RATE = 1,400 VEHICLES/LANE

RESIDENTIAL ACCESS
34' OR 38' ROAD SECTION - PRIVATE
SCALE: 1"=10'
(NO PARKING)

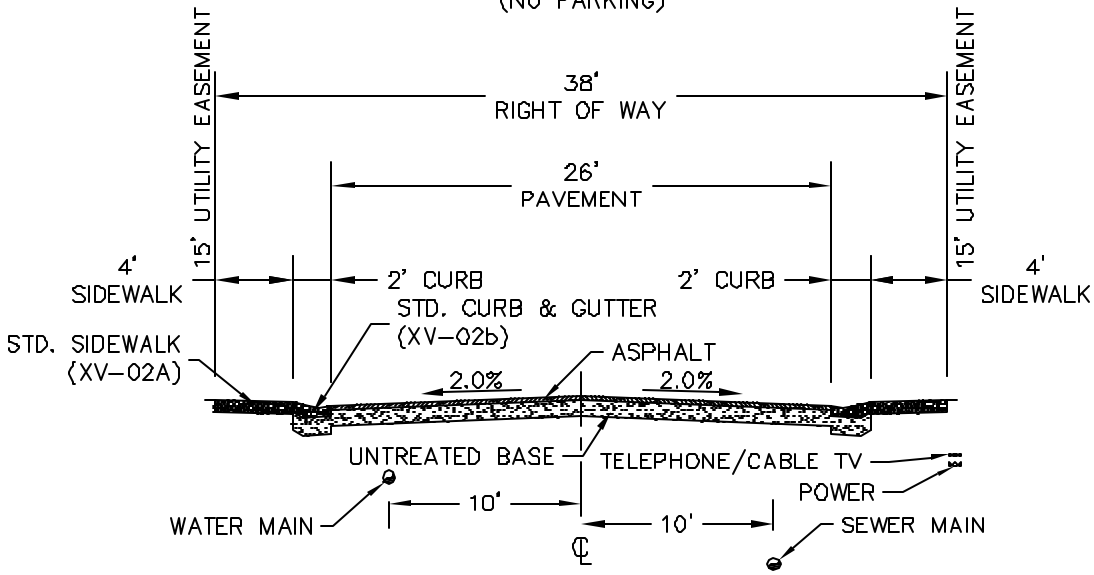

TYPICAL STREET SECTIONS AND LANE WIDTHS
11' TRAVEL LANES MINIMUM

AASHTO - THE PAN PORTION OF GUTTER CAN BE USED AS PART OF PARKING LANE (2')

FILE: KANAB-TYP-STREET-CROSS-REV.dwg

S:\dskproj\001-01\KANAB-TYP-STREET-CROSS-REV.dwg, RES ACCESS, 5/23/2006 10:05:07 AM, kbenson

SHEET XV-01B

DRAWING # - RCS-2

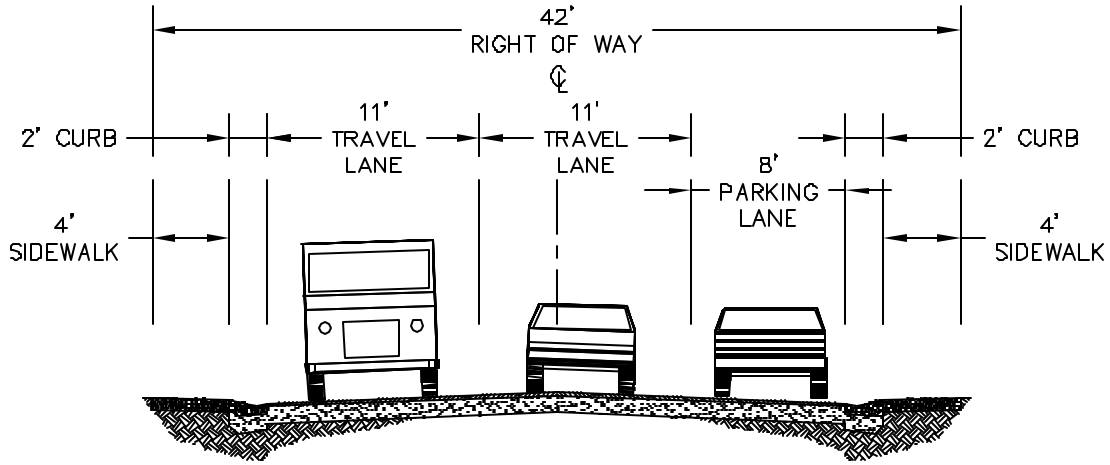

MINOR LOCAL
42' ROAD SECTION - PRIVATE
SCALE: 1"=10'
(PARKING ONE SIDE ONLY)

SF = SERVICE FLOW
S.F. RATE = 1,400 VEHICLES/LANE

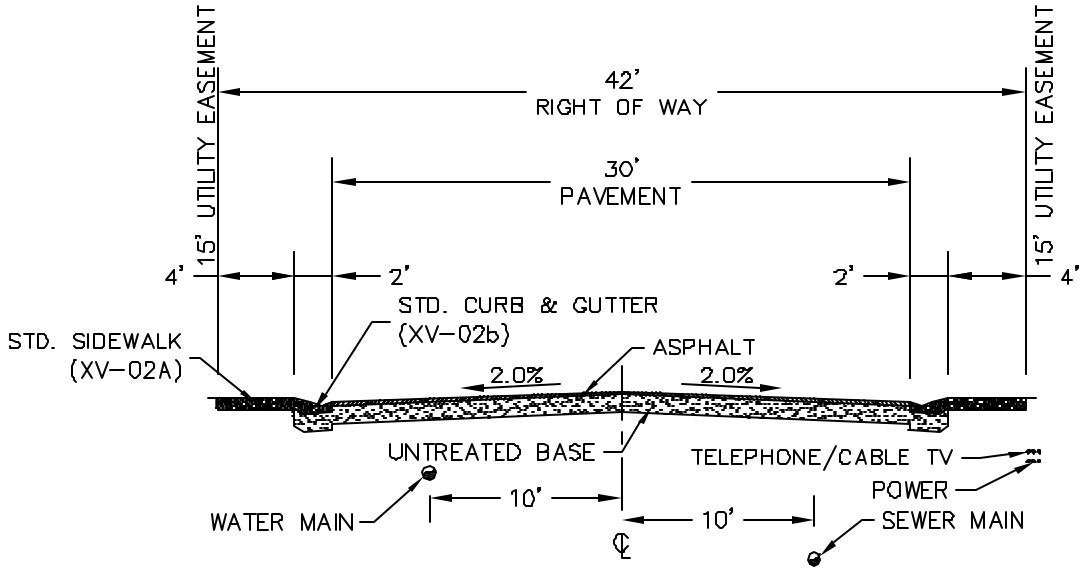

TYPICAL STREET SECTIONS AND LANE WIDTHS
11' TRAVEL LANES MINIMUM

AASHTO - THE PAN PORTION OF GUTTER CAN BE USED AS PART OF PARKING LANE (2')

S:\dskproj\001-01\KANAB-TYP-STREET-CROSS-REV.dwg, MINOR LOCAL, 5/23/2006 10:05:47 AM, kbenson

FILE: KANAB-TYP-STREET-CROSS-REV.dwg

SHEET XV-01C

DRAWING # - RCS-3

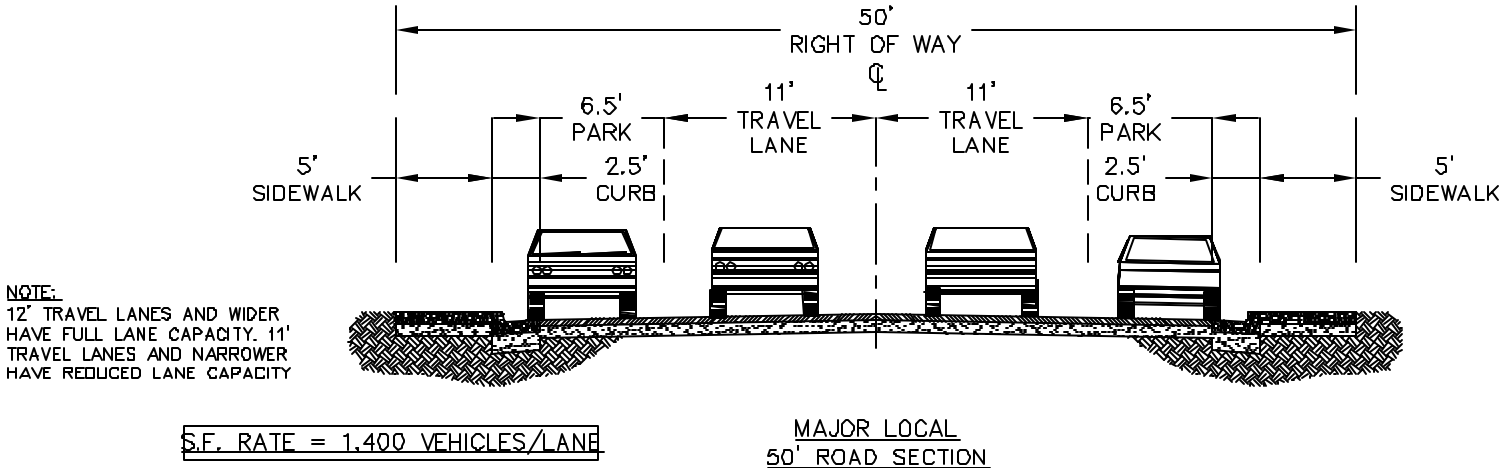

NOTE:
12' TRAVEL LANES AND WIDER HAVE FULL LANE CAPACITY. 11' TRAVEL LANES AND NARROWER HAVE REDUCED LANE CAPACITY

S.F. RATE = 1,400 VEHICLES/LANE

MAJOR LOCAL
50' ROAD SECTION
SCALE: 1"=10'

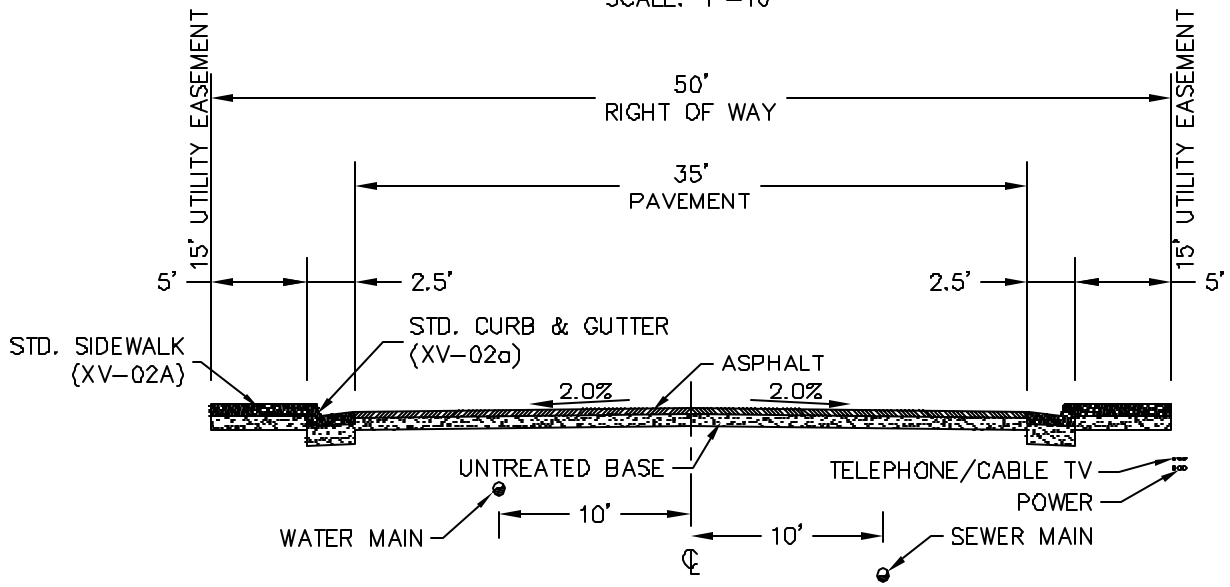

TYPICAL STREET SECTIONS AND LANE WIDTHS
11' TRAVEL LANES MINIMUM

AASHTO – THE PAN PORTION OF GUTTER CAN BE USED AS PART OF PARKING LANE (2')

FILE: KANAB-TYP-STREET-CROSS-REV.dwg

S:\dskproj\1001-01\KANAB-TYP-STREET-CROSS-REV.dwg, MAJOR LOCAL, 5/23/2006 10:06:19 AM, kbeltran

SHEET XV-01D

DRAWING # - RCS-4

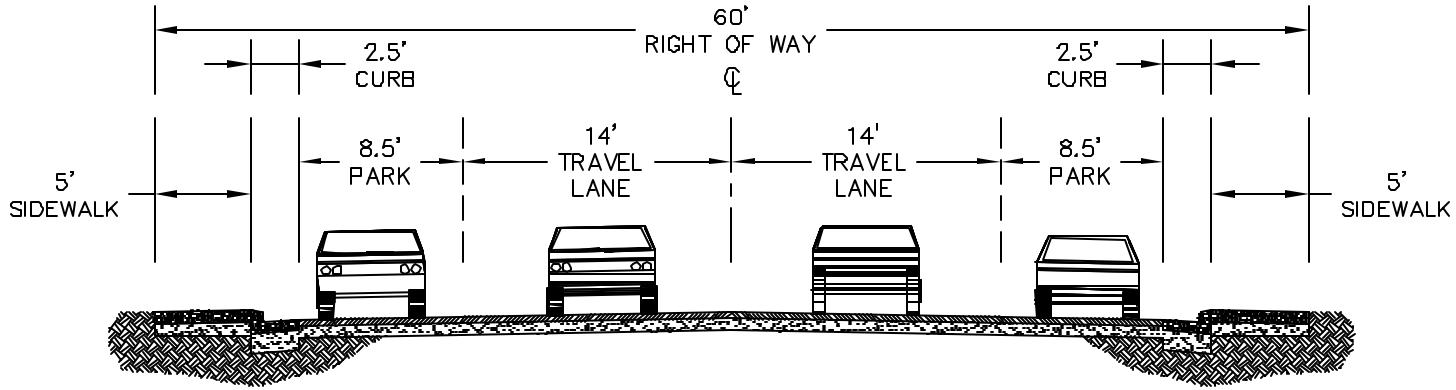

S.F. RATE = 1,400 VEHICLES/LANE

MINOR COLLECTOR
60' ROAD SECTION
SCALE: 1"=10'

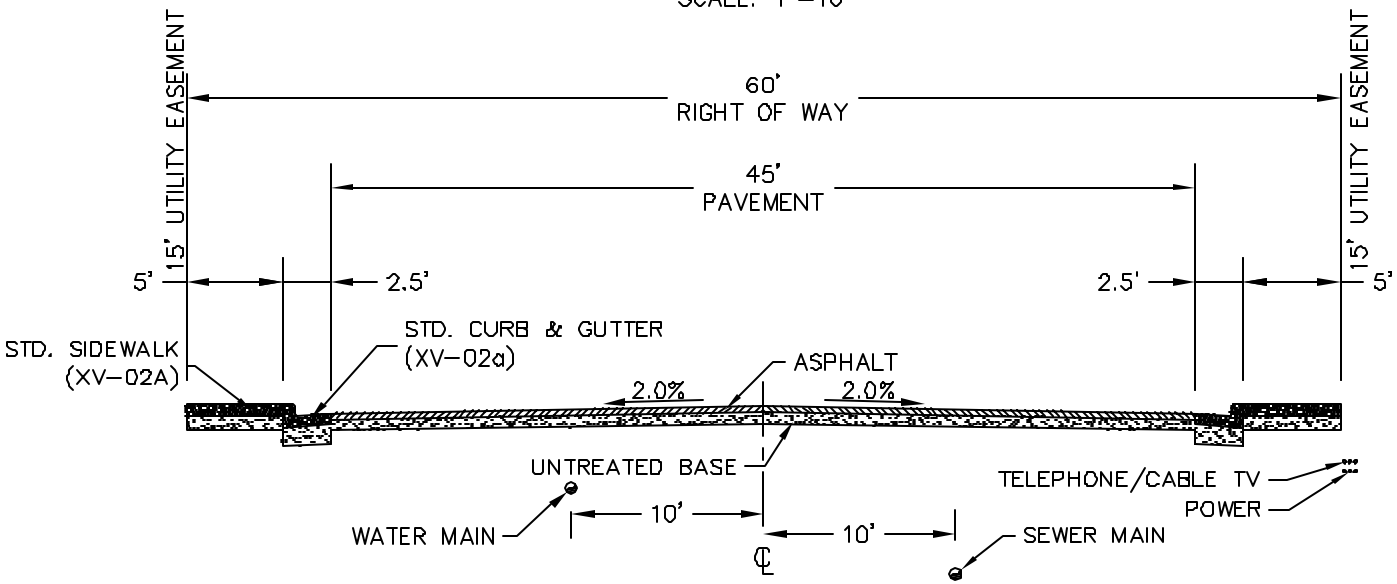

TYPICAL STREET SECTIONS AND LANE WIDTHS
11' TRAVEL LANES MINIMUM

AASHTO – THE PAN PORTION OF GUTTER CAN BE USED AS PART OF PARKING LANE (2')

FILE: KANAB-TYP-STREET-CROSS-REV.dwg

S:\dskproj\001-01\KANAB-TYP-STREET-CROSS-REV.dwg, MINOR COLLECTOR, 5/23/2006 10:07:11 AM, kbeilin

SHEET
XV-
01E

DRAWING # - RCS-5

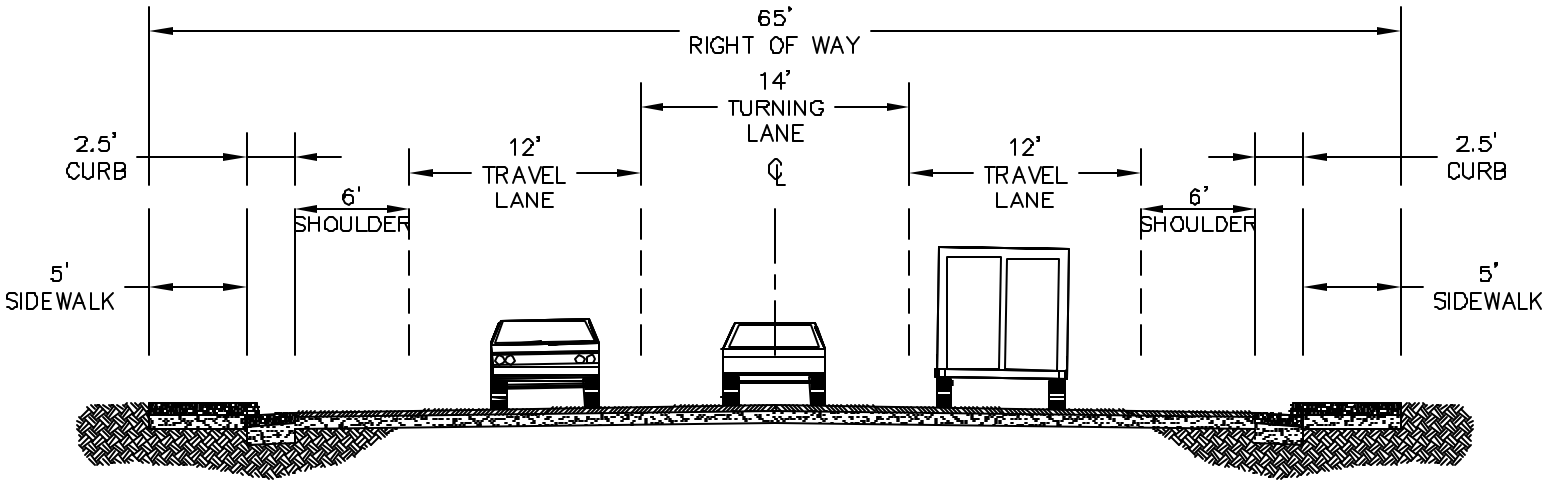

NOTE:
12' TRAVEL LANES AND WIDER HAVE FULL LANE CAPACITY. 11' TRAVEL LANES AND NARROWER HAVE REDUCED LANE CAPACITY

S.F. RATE = 1,400 VEHICLES/LANE

MAJOR COLLECTOR
65' ROAD SECTION
SCALE: 1"=10'

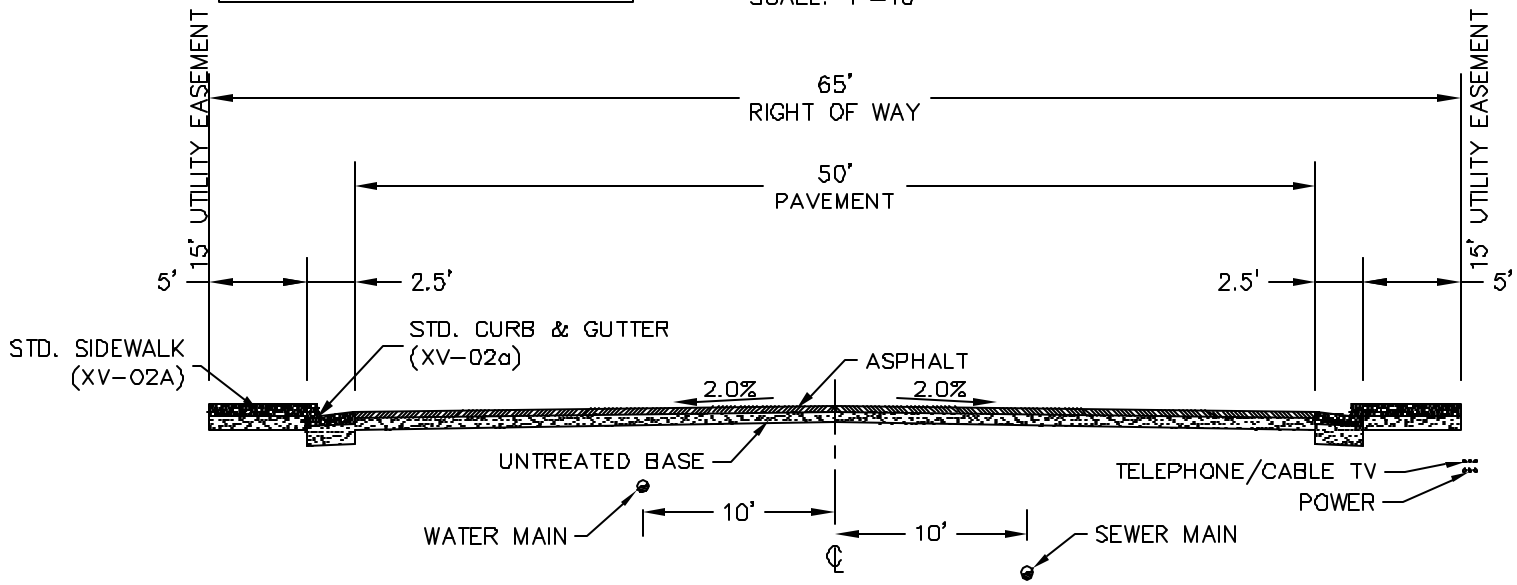

TYPICAL STREET SECTIONS AND LANE WIDTHS
11' TRAVEL LANES MINIMUM

S:\dskproj\001-01\KANAB-TYP-STREET-CROSS-REV.dwg, MAJOR COLLECTOR, 5/23/2006 10:07:56 AM, kbeilin

FILE: KANAB-TYP-STREET-CROSS-REV.dwg

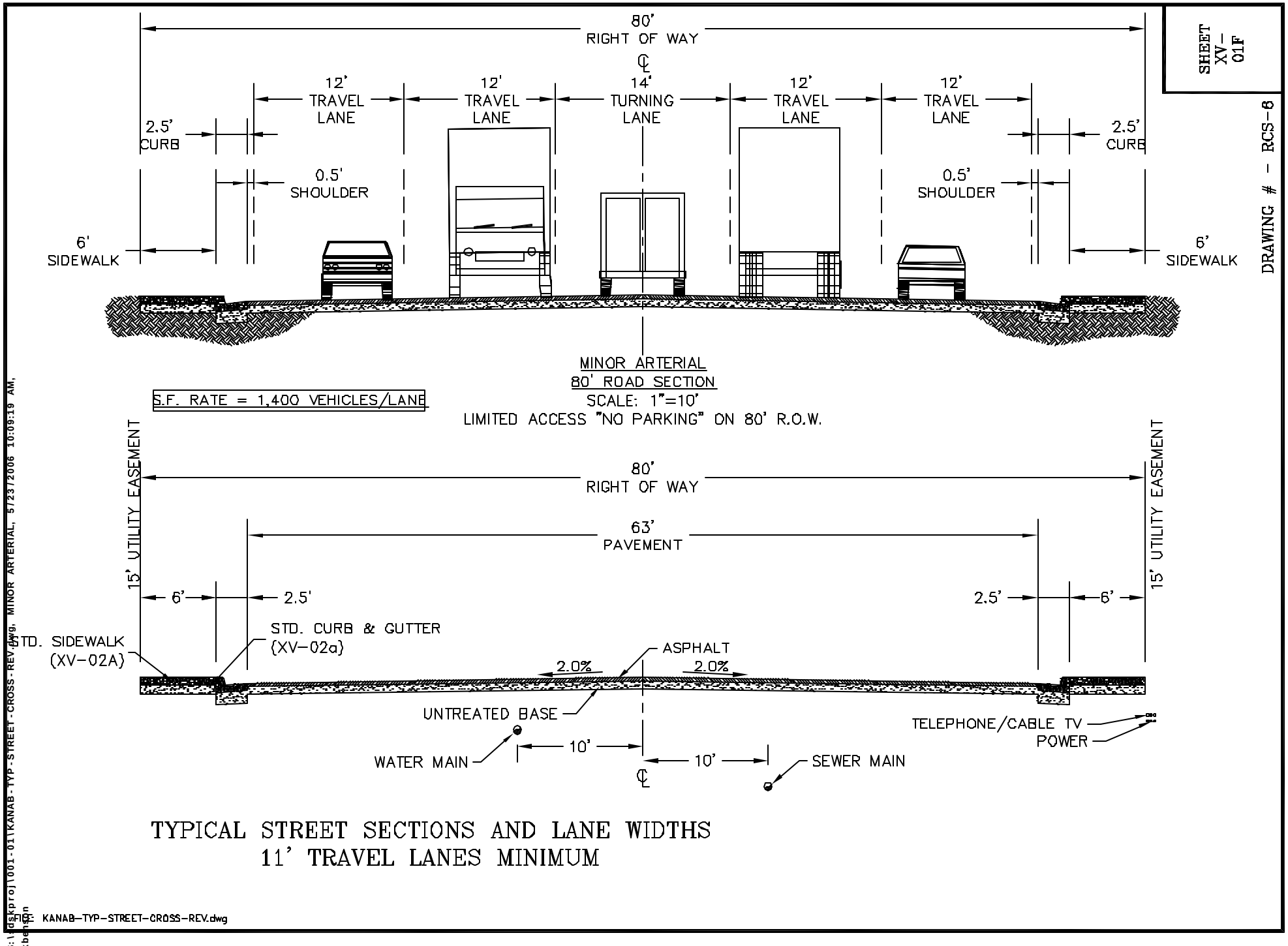

TYPICAL STREET SECTIONS AND LANE WIDTHS
11' TRAVEL LANES MINIMUM

SHEET XV-01F

DRAWING # - RCS-8

S:\dskproj\001-01\KANAB-TYP-STREET-CROSS-REV.dwg, MINOR ARTERIAL, 5/23/2006 10:09:19 AM, kbenson

FILE: KANAB-TYP-STREET-CROSS-REV.dwg

SHEET XV-01G

DRAWING # - RCS-7

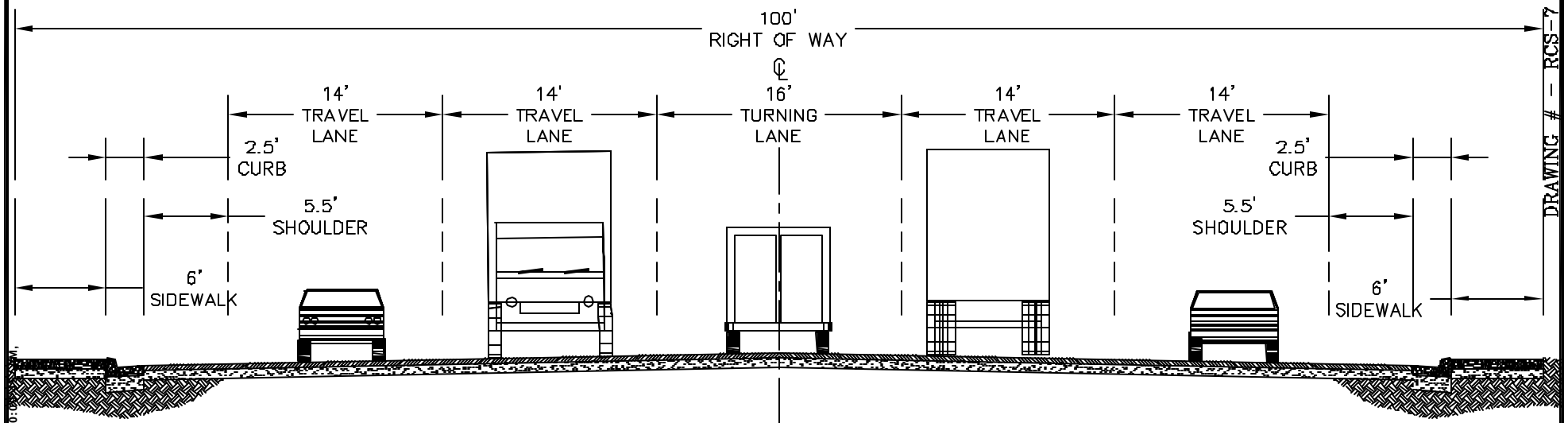

MAJOR ARTERIAL
100' ROAD SECTION
SCALE: 1"=10'
LIMITED ACCESS "NO PARKING" ON 100' R.O.W.

S.F. RATE = 1,400 VEHICLES/LANE

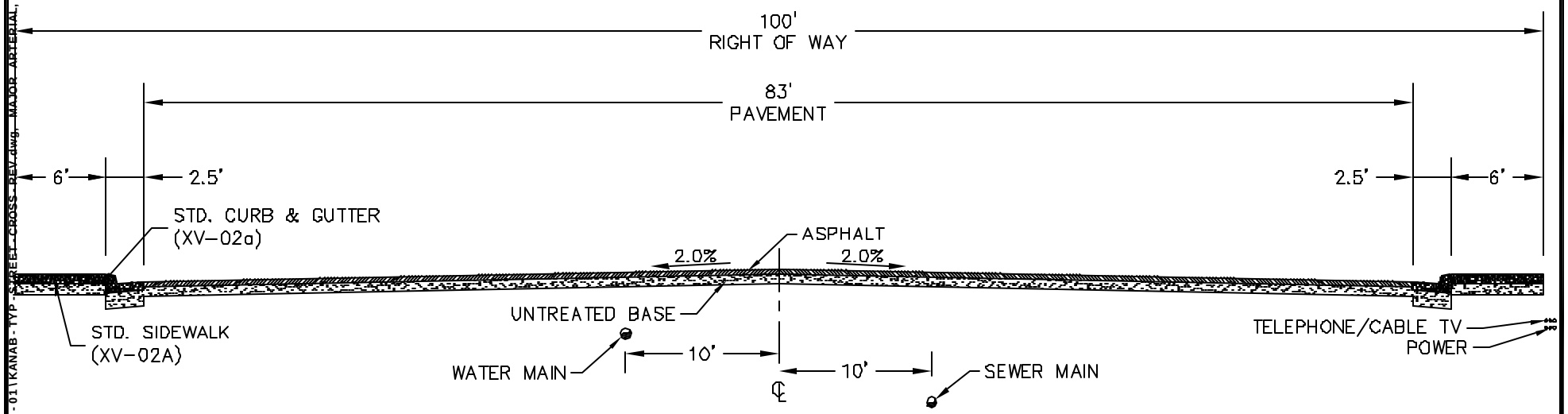

TYPICAL STREET SECTIONS AND LANE WIDTHS
11' TRAVEL LANES MINIMUM

S:\dskproj\1001-01\KANAB-TYP-STREET-CROSS-REV.dwg, MAJOR ARTERIAL, 5/23/2006 10:08:52 AM,
kbenson
FILE: KANAB-TYP-STREET-CROSS-REV.dwg

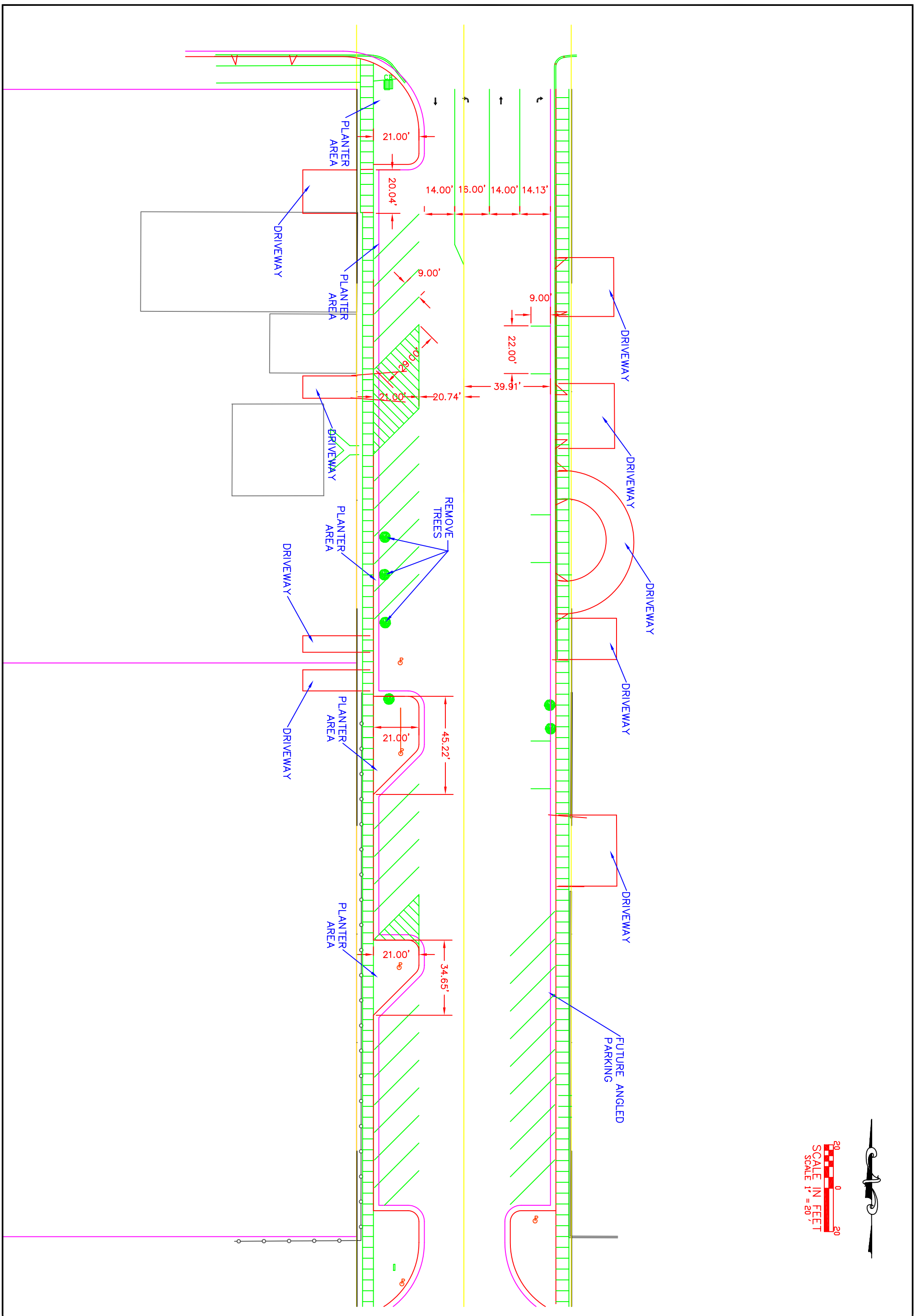

DATE:	FILE:
OCT 2006	KANAB
SHEET:	DRAWN BY:
SP1	JDB

TC ENGINEERING
A "DESIGN-BUILD" FIRM
EXCELLENCE....ON TIME!
DANIEL W. THEBEAU, P.E.
P.O. BOX 55, KANAB, UTAH 84741
(435)644-2031 (888)644-2031
(435)689-0155

KANAB CITY MAIN ST.
PROPOSED LAYOUT
KANAB, UT

1" =20'

REDUCE SCALE BY ½ FOR 11x17 DRAWINGS

DATE:	REVISION:
10/26/06	INITIAL DESIGN
	OWNER REVIEW
	CITY APPROVAL
	FOR CONSTRUCTION

CITY OF KANAB
ZONING MAP

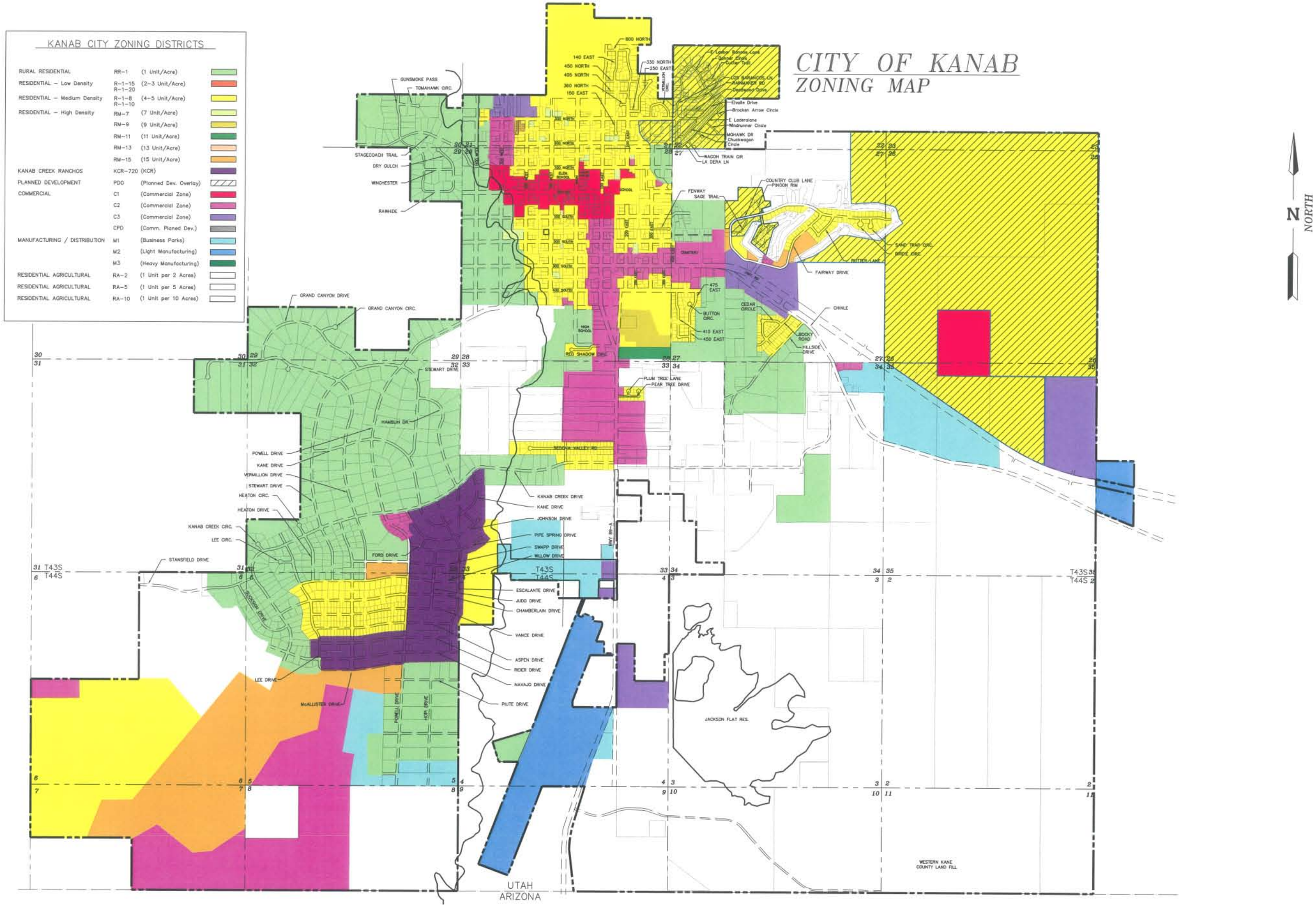

CITY OF KANAB
OVERLAY ZONES

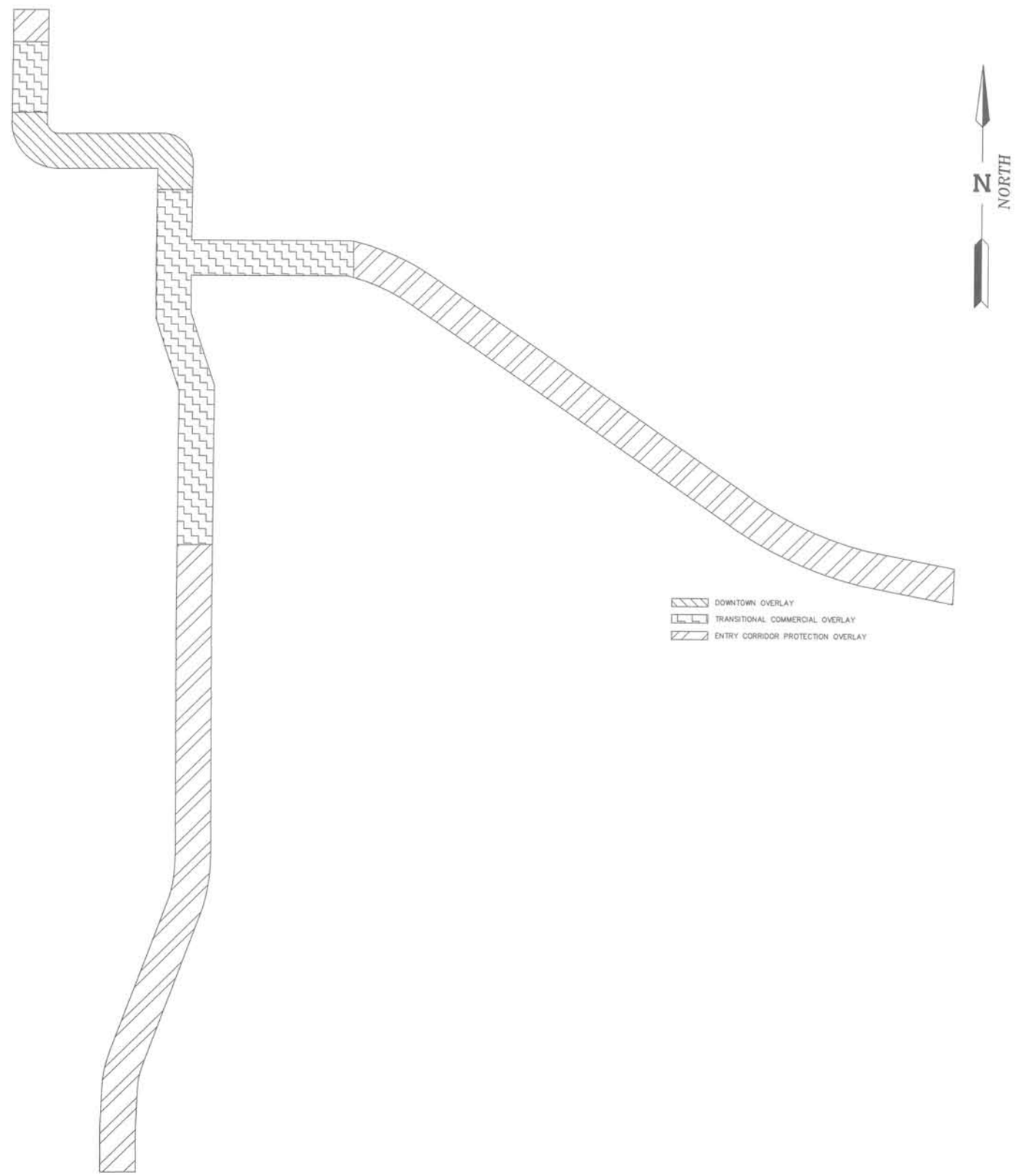

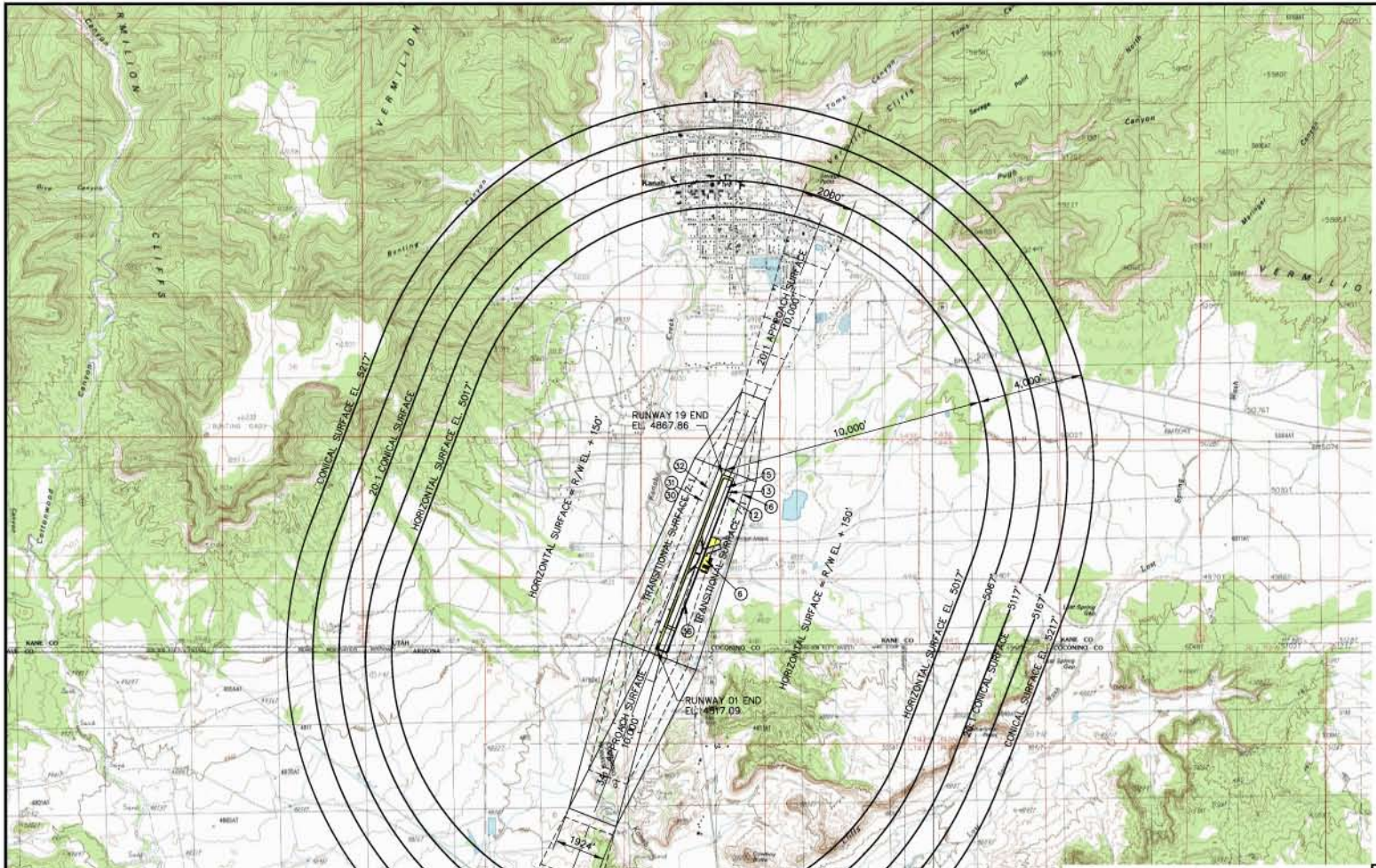

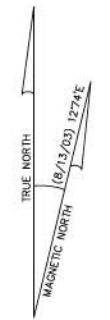

0 1000 2000 4000
SCALE IN FEET

METRIC CONVERSION
1 METER = 39.37" = 3.28'
1 ACRE = 4046.86m²

OBSTRUCTIONS

SURFACE	No.	STRUCTURE	ELEVATION	Height above ground	FUTURE
TRANSITIONAL	6	ANTENNA	4878.57	9.0	REMOVE
TRANSITIONAL	12	TREE	4907.17	33.0	REMOVE
TRANSITIONAL	13	TREE	4908.92	35.8	REMOVE
PRIMARY	15	WILLOWS	4877.00	9.7	REMOVE
TRANSITIONAL	16	TOWER	4944.69	1.3	REMOVE
PRIMARY	30	DOG KENNEL	4883.00	5.2	REMOVE
TRANSITIONAL	31	TREE	4892.30	34.6	REMOVE
TRANSITIONAL	32	ROAD	4858.05	7.5	RELOCATE
TRANSITIONAL	36	TREE	4866.34	21.0	REMOVE
–	–	–	–	–	–
–	–	–	–	–	–
–	–	–	–	–	–
–	–	–	–	–	–

KANAB AIRPORT

KANAB, UTAH

AIRPORT LAYOUT PLAN

AIRPORT AIRSPACE

CREAMER & NOBLE ENGINEERS
ST. GEORGE, UTAH

DRAWN BY: Del S. Wetenkamp
CHECKED BY: Mel C. Leseberg
APPROVED: K. REED NOBLE

REVISIONS

SCALE: AS SHOWN
TITLE: AIRPORT AIRSPACE
DATE: MARCH 2004
SHEET: 3 of 10
FIGURE –

BUILDINGS/STRUCTURES

No.	STRUCTURE	MAX. ELEV.
1	TERMINAL	4853.47
2	TRAILER	4853.63
3	HANGAR	4863.64
4	FUEL PUMP	4850.00
5	LIGHT POLE	4864.00
6	ANTENNA	4878.57
7	HANGER	4863.50
8	HANGER	4854.20
9	HANGER	4854.40
10	HANGARS	4855.66
11	WIND CONE	4871.45
12	TREE	4907.17
13	TREE	4908.92
14	WINDSOCK	4875.34
15	WILLOWS	4877.00
16	TOWER	4944.69
17	FENCE	4872.50
18	BUILDING	4889.32
19	MOTEL	4882.86
20	POWER POLE	4903.06
21	POWER POLE	4905.69
22	POWER POLE	4907.47
23	ROAD (US HWY 89)	4877.88
24	BUILDING	4893.54
25	BUILDING	4888.82
26	CHURCH	4884.55
27	BUILDING	4893.04
28	ROAD	4870.69
29	HOUSE	4891.25
30	DOG KENNEL	4863.00
31	TREE	4892.30
32	ROAD	4858.05
33	WINDSOCK	4837.69
34	FENCE	4813.72
35	TREE	4855.93
36	TREE	4866.34

LEGEND

EXISTING	FUTURE	
		PROPERTY LINE
		FENCE LINE
		BUILDINGS
	SAME	BUILDING RESTRICTION LINE
	SAME	AIRPORT REFERENCE POINT
		CONTOUR LINE
	SAME	AIRPORT BEACON
		EXISTING PAVEMENT
		FUTURE PAVEMENT
		SURVEY MONUMENT
		OBJECT FREE AREA (OFA)
		RUNWAY SAFETY AREA (RSA)
		TAXIWAY OBJECT FREE AREA (TOFA)
	SAME	RUNWAY THRESHOLD LIGHTS
	SAME	RUNWAY END IDENTIFIER LIGHTS
	SAME	PAPI

RUNWAY DATA

		RUNWAY 01–19	
		EXISTING	FUTURE
EFFECTIVE GRADIENT (%)		0.13	SAME
INSTRUMENT RUNWAY	01	GPS NPI	SAME
	19	NONE	NONE
PAVEMENT TYPE		ASPHALT	SAME
PAVEMENT STRENGTH		12,500 SWG	40,000 SWG/60,000 DWG
APPROACH SURFACES	01	34:1	SAME
	19	20:1	SAME
RUNWAY LIGHTING SYSTEM		MIRL	SAME
RUNWAY MARKING	01	NPI	SAME
	19	VISUAL	VISUAL
NAVIGATIONAL AIDS		VISUAL	VISUAL
RUNWAY LENGTH		6200'	7100'
RUNWAY WIDTH		75'	100'
TAXIWAY LENGTH		–	7100'
TAXIWAY WIDTH		–	35'
AIRCRAFT APPROACH CATEGORY/DESIGN GROUP		B–II	C–II
DESIGN AIRCRAFT		BEECH KING AIR B200	CESSNA CITATION X
WINGSPAN		54.5'	63.6'
APPROACH SPEED		103 KTS	111 KTS
WEIGHT		12,500 LBS	36,100 LBS
RUNWAY SAFETY AREA (L/W)		6800/150	9100/500
OBJECT FREE AREA (L/W)		6800/500	9100/800
APPROACH VISIBILITY AIDS		PAPI	SAME
MAX. GRADIENT WITHIN R/W LENGTH		0.75%	0.75%
APPROACH VISIBILITY MINIMUMS		(01) 1 MILE (19) VIS	SAME
RUNWAY LINE–OF–SIGHT		CRITERIA MET	CRITERIA MET
R/W ELEV. (NAD 88) END RW 1		4823.13	4817.09
R/W ELEV. (NAD 88) END RW 19		4867.86	SAME
R/W ELEV. (NAD 88) TOUCHDOWN ZONE RW 1		4831.09	4823.80
R/W ELEV. (NAD 88) TOUCHDOWN ZONE RW 19		4857.71	SAME
R/W ELEV. (NAD 88) HIGH POINT		4867.86	SAME
R/W ELEV. (NAD 88) LOW POINT		4823.13	4817.09

AIRPORT DATA

		EXISTING	FUTURE
AIRPORT ELEVATION		4867.86	SAME
AIRPORT REFERENCE POINT COORDINATES (NAD 1983)	LAT.	37°00'37.83"N	37°00'33.66"N
	LONG.	112°31'53.32"W	112°31'55.30"W
MEAN MAX. TEMP. HOTTEST MONTH		90°F	SAME
FAA PART 77 APPROACH SLOPE		01–34:1/19–20:1	SAME
AIRPORT & TERMINAL NAV. AIDS		WINDCONE SEGMENTED CIRCLE	SAME
AIRPORT MAGNETIC DECLINATION (8/13/03)		12°74'E	VARIES
AIRPORT REFERENCE CODE		B–II	C–II
WIND COVERAGE (%) 10.5/13.0/16.0		97.48/99.31/99.89	SAME
NPIAS ROLE		G.A. UTILITY	G.A. UTILITY
TOTAL ACREAGE		167	243
TAXIWAY LIGHTING SYSTEM		NONE	MITL
TAXIWAY MARKING		CENTERLINE	SAME
RUNWAY 1 END COORDINATES (NAD 1983)	LAT.	37°00'09.31"N	37°00'00.89"N
	LONG.	112°32'06.92"W	112°32'10.93"W
RUNWAY 19 END COORDINATES (NAD 1983)	LAT.	37°01'06.46"N	SAME
	LONG.	112°31'39.66"W	SAME

NOTES:

1. NO THRESHOLD SURFACE OBJECT PENETRATION.
2. THE BUILDING RESTRICTION LINE (BRL) SHOWN RESTRICTS BUILDINGS TO 35'.
3. NO OFZ OBJECT PENETRATIONS.

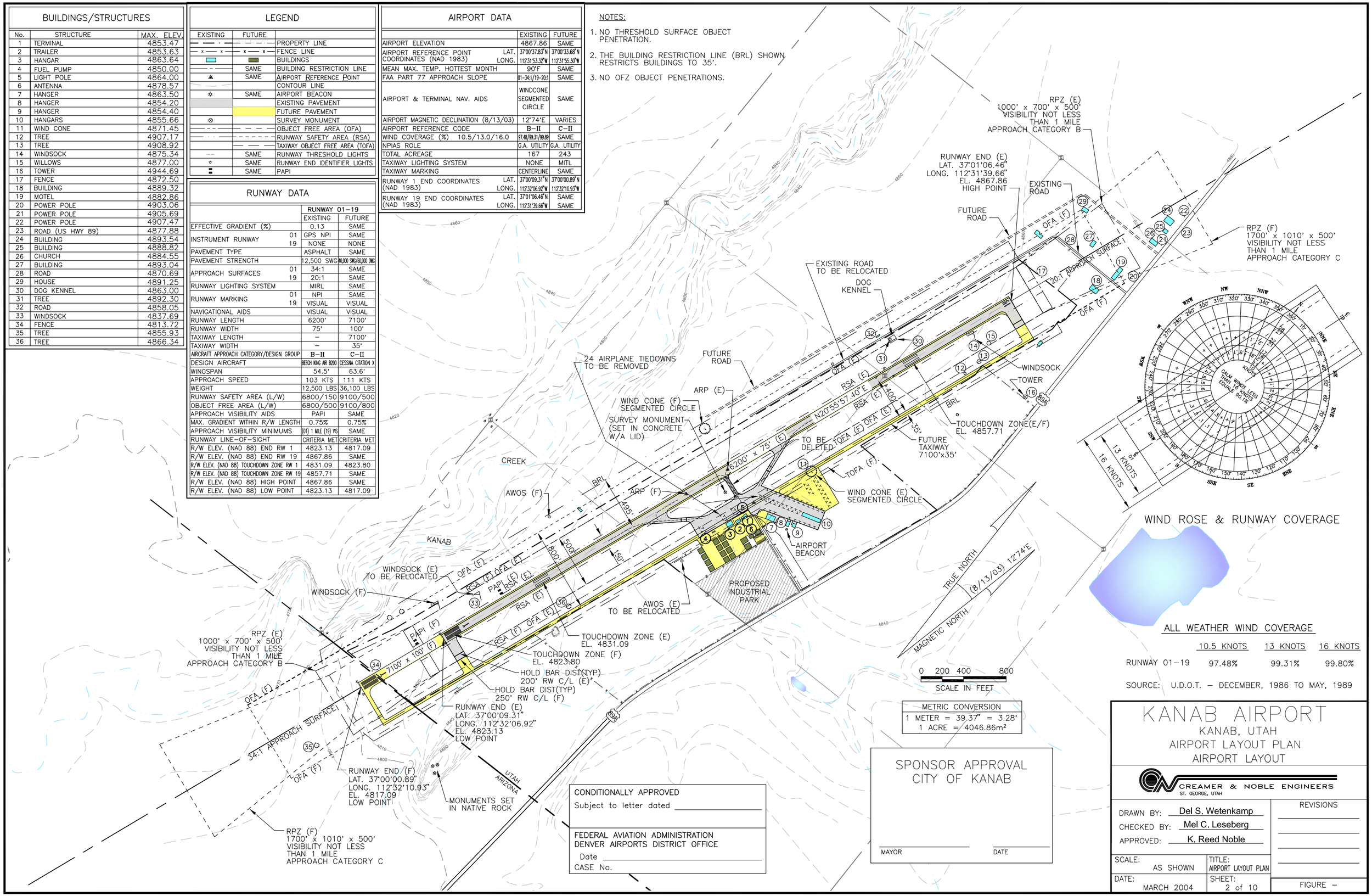

ALL WEATHER WIND COVERAGE

	10.5 KNOTS	13 KNOTS	16 KNOTS
RUNWAY 01–19	97.48%	99.31%	99.80%

SOURCE: U.D.O.T. – DECEMBER, 1986 TO MAY, 1989

METRIC CONVERSION
1 METER = 39.37" = 3.28'
1 ACRE = 4046.86m²

CONDITIONALLY APPROVED
Subject to letter dated _____

FEDERAL AVIATION ADMINISTRATION
DENVER AIRPORTS DISTRICT OFFICE
Date _____
CASE No.

SPONSOR APPROVAL
CITY OF KANAB

MAYOR _____ DATE _____

KANAB AIRPORT

KANAB, UTAH
AIRPORT LAYOUT PLAN
AIRPORT LAYOUT

CREAMER & NOBLE ENGINEERS
ST. GEORGE, UTAH

DRAWN BY: Del S. Wetenkamp
CHECKED BY: Mel C. Leseberg
APPROVED: K. Reed Noble

REVISIONS

SCALE: AS SHOWN
TITLE: AIRPORT LAYOUT PLAN
DATE: MARCH 2004
SHEET: 2 of 10
FIGURE –